Rexroth
Bosch Group

# Proportional pressure relief valve direct operated, without/with integral control electronics (OBE)

**RE 29162/05.06** 1/12
Replaces: 10.05

## Types DBET and DBETE

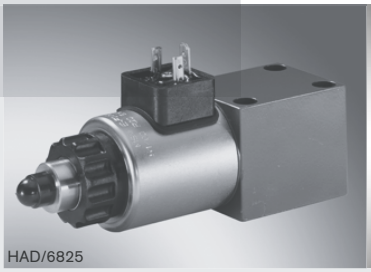

Type DBET-6X/..

Type DBETE-6X/..

Nominal size 6
Component series 6X
Maximum operating pressure 420 bar
Maximum flow 2 l/min

## Overview of contents


| Inhalt | Seite |
|---|---|
| Features | 1 |
| Ordering details | 2 |
| Preferred types, symbols | 2 |
| Function, section | 3 |
| Technical data | 4 and 5 |
| Electrical connections, plug-in connectors | 6 |
| Integrated control electronics (OBE) for type DBETE | 7 |
| Characteristic curves | 8 and 10 |
| Unit dimensions, type DBET | 11 |
| Unit dimensions, type DBETE | 12 |


Information on available spare parts:
www.boschrexroth.com/spc

## Features

- Direct operated valve for limiting a system pressure
- Operated via a proportional solenoid
- Proportional solenoid with central thread and removable coil
- For subplate mounting:
  Porting pattern to ISO 4401-03-02 subplates to catalogue sheet RE 45052, (separate order, see pages 11 and 12)
- Integrated control electronics (OBE) for type DBETE:
  - Low example spread of the command value-pressure-characteristic curve
- CE: For the type DBETE with integrated control electronics the EMC directive 89/336/EG is complied with
  - EN 61000-6-3: 2005-08
  - The compliance of the identified products with the specifications of the stated directive can be proven by fully complying with the stated standards (see page 5 „Environmental simulation test“).
- External control electronics for type DBET (separate order, see page 5)
  - Analogue amplifier in Eurocard format and modular design
  - Independent up and down ramps
  - Fine calibration of the command value-pressure-characteristic curve is possible externally on the control electronics

## Ordering details

| DBET | – 6X/ | | G24 | | | | * |
|---|---|---|---|---|---|---|---|

Proportional pressure relief valve

For external control electronics = No code
With integrated electronics (OBE) = E

Component series 60 to 69 = 6X
(60 to 69: unchanged installation and connection dimensions)

**Max. pressure stage**
Up to 50 bar = 50
Up to 100 bar = 100
Up to 200 bar = 200
Up to 315 bar = 315
Up to 350 bar = 350
Up to 420 bar = 420

Pilot oil drain internal = No code
Pilot oil drain external = Y

Control electronics supply voltage 24 V DC = G24

**Other types of protection on request!**

Further details in clear text

**Seal material**
**V =** FKM seals, suitable for mineral oil (HL, HLP) to DIN 51524

**Electronic interfacs A1 or F1 for the DBETE:**
**A1 =** Command value input 0 to 10 VDC
**F1 =** Command value input 4 to 20 mA
**No code =** for the DBET

**Electrical connections for the DBET:**
**K4 =** **Without** plug-in connector, with component plug to DIN EN 175301-803
Plug-in connector, separate order, see page 6

**for the DBETE:**
**K31 =** Without plug-in connector, with component plug to DIN EN 175201-804
Plug-in connector, separate order, see page 6

## Preferred types

| Type DBET | |
|---|---|
| **Type** | **Material No.** |
| DBET-6X/50G24K4V | R901000842 |
| DBET-6X/100G24K4V | R901000845 |
| DBET-6X/200G24K4V | R901000846 |
| DBET-6X/315G24K4V | R901000847 |
| DBET-6X/350G24K4V | R901000848 |

| Type DBETE | |
|---|---|
| **Type** | **Material No.** |
| DBETE-6X/50G24K31A1V | R901029966 |
| DBETE-6X/100G24K31A1V | R901029967 |
| DBETE-6X/200G24K31A1V | R901029968 |
| DBETE-6X/315G24K31A1V | R901029969 |
| DBETE-6X/350G24K31A1V | R901029970 |

## Symbols

For external control electronics (type DBET)

Pilot oil drain internal

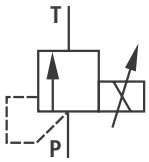


Pilot oil drain external (Y)

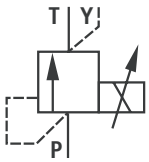


With integrated control electronics (type DBETE)

Pilot oil drain internal

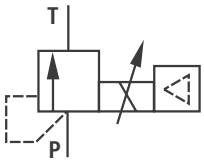


Pilot oil drain external (Y)

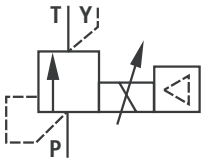

## Function, section

### General

The type DBET proportional pressure relief valves are fine control valves of poppet design and are used to limit a system pressure. They are operated by a proportional solenoid with central thread and removable coil. The inner chamber is connected with port T or Y and is filled with pressure fluid. With these valves it is possible to infinitely vary the system pressure, which is to be limited, in relation to the electrical command value.

These valves basically comprise of the housing (1), a proportional solenoid (2), the valve seat (3) and the valve poppet (4).

### Basic principle

To adjust the system pressure a command value is applied to the control electronics. The electronics apply an electrical current to the solenoid which is in relation to the command value. The proportional solenoid converts the electrical current into a mechanical force that acts via the armature pin (5) on the valve poppet (4). The valve poppet (4) presses directly onto the valve seat (3) and closes the connection between P and T or Y. If the hydraulic force on the valve poppet (4) is the same as the solenoid force, then the valve controls the set pressure in that the valve poppet (4) lifts off the valve seat (3) and permits pressure fluid to flow from port P to T or Y. At a zero command value the control electronics only apply a minimum control current to the proportional solenoid (2) and thereby sets the minimum settable pressure.

**Type DBET**

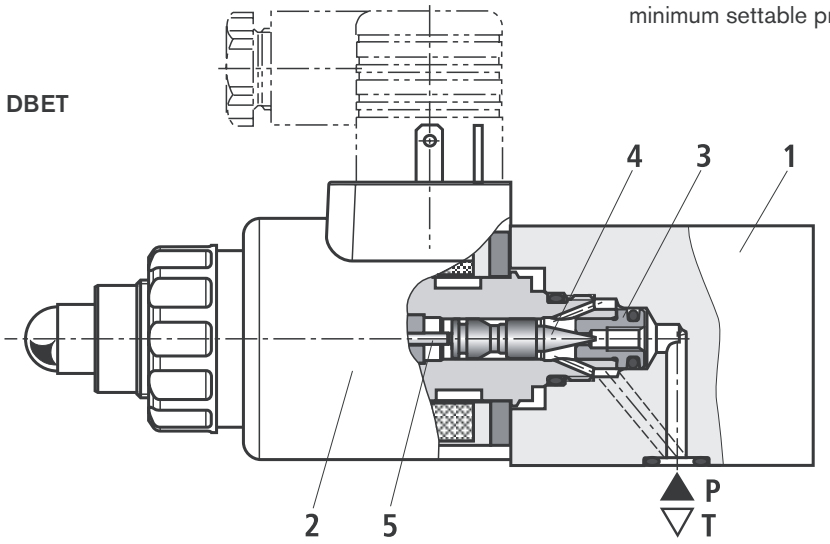


**Type DBET...Y**

Pilot oil drain external

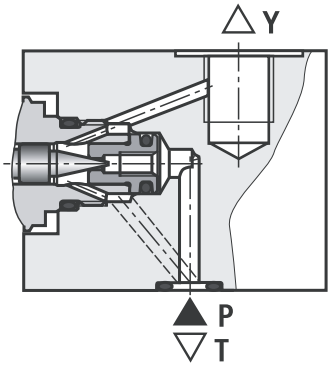


**Type DBETE**

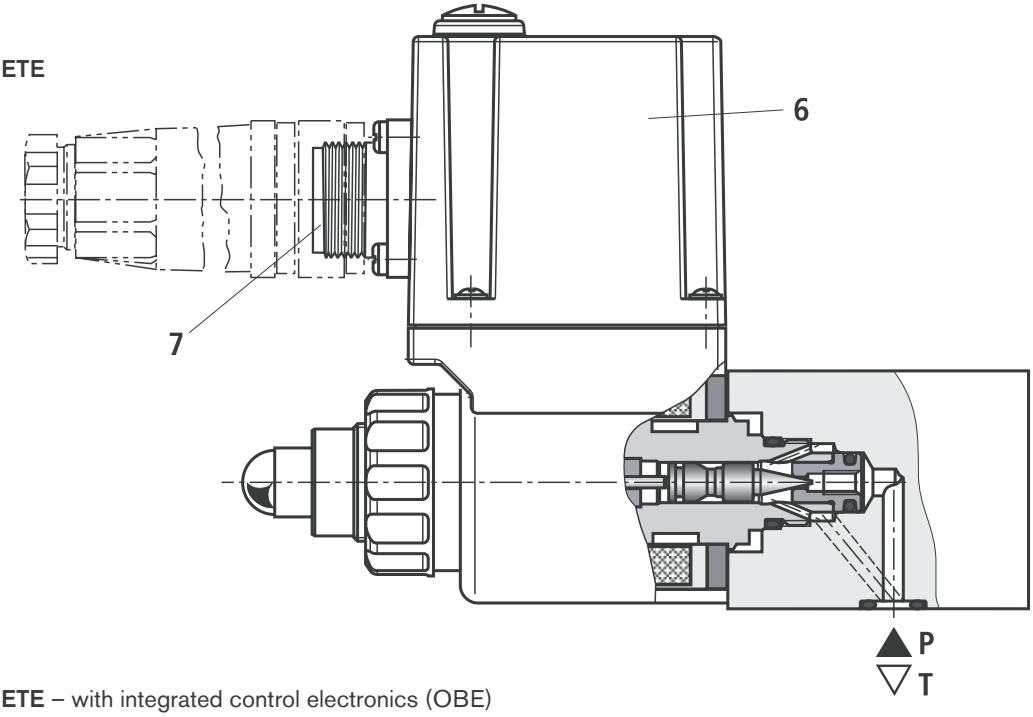


**Type DBETE** – with integrated control electronics (OBE)

The function and design of this valve is the same as the valve type DBET. On the proportional solenoid there is an additional housing (6) which contains the control electronics.

The supply and command value voltages are fed to the component plug (7). The command value-pressure-characteristic curve is factory pre-set to a low example spread.

For further details regarding the control electronics, see page 5 to 7.

## **Technical data** (for applications outside these parameters, please consult us!)

| **General** | | **DBET** | **DBETE** |
|---|---|---|---|
| Installation | | Optional | |
| Storage temperature range | °C | –20 to +80 | |
| Ambient temperature range | °C | –20 to +70 | –20 to +50 |
| Weight | kg | 2.0 | 2.15 |

| **Hydraulic** (measured with HLP 46; $\vartheta_{oil}$ = 40 °C ± 5 °C ) | | | **DBET** | **DBETE** |
|---|---|---|---|---|
| Max. operating pressure | Port P | | 420 | |
| Max. settable pressure | Pressure stage 50 bar | bar | 50 | |
| | Pressure stage 100 bar | bar | 100 | |
| | Pressure stage 200 bar | bar | 200 | |
| | Pressure stage 315 bar | bar | 315 | |
| | Pressure stage 350 bar | bar | 350 | |
| | Pressure stage 420 bar | bar | 420 | |
| Min. settable pressure (with a zero command value 0 V or 4 mA) | | bar | See char. curves on pages 10 | |
| Return pressure | Port T or Y | bar | Separate and at zero pressure to tank | |
| Max. flow | | L/min | 2 [1] | |
| Pressure fluid | | | Mineral oil (HL, HLP) to DIN 51524<br>Other pressure fluids on request! | |
| Pressure fluid temperature range | | °C | –20 to +80 | |
| Viscosity range | | $mm^2/s$ | 20 to 380 perferably to 30 to 46 | |
| Maximum permissible contamination degree of pressure fluid Cleanliness class to ISO 4406 (c) | | | class 20/18/15 [2] | |
| Hysteresis | | % | < 4 of the max. settable pressure | |
| Reversal span | | % | < 0.5 of the max. settable pressure | |
| Response sensitivity | | % | < 0.5 of the max. settable pressure | |
| Linearity (flow 0.8 l/min) | | % | ±3 of the max. settable pressure | |
| Example spread of the com. value-pressure-char. curves at 0.8 l/min; pressure rising | At com. value 20% | % | < ±1.5 of the max. settable pressure [3] | |
| | At com. value 100% | % | < ±5 of the max. settable pressure [4] | < ±1.5 of the max. settable pressure |
| Step response ($T_u + T_g$) 0 → 100% or 100% → 0<br>Pipe volume < 20 $cm^3$; $q_V$ = 0.8 l/min | | ms | 80 (depending on the system!) | |

[1] Take into account the notes regarding flow limitation on pages 8 and 9, pressure stages 315 and 350 bar

[2] The cleanliness class stated for the components must be adhered too in hydraulic systems. Effective filtration prevents faults from occurring and at the same time increases the component service life.
For the selection of filters see catalogue sheets RE 50070, RE 50076, RE 50081, RE 50086 and RE 50088.

[3] Zero point calibration is factory pre-set

[4] Calibration is possible on the control electronics

## Technical data (for applications outside these parameters, please consult us!)

| Electrical | | | DBET | DBETE |
|---|---|---|---|---|
| Supply voltage | Nominal voltage | VDC | 24 | |
| | Lower limiting value | VDC | 21 | |
| | Upper limiting value | VDC | 35 | |
| Min. control current (with a 0 V or 4 mA com. value) | | mA | 100 | |
| Max. control current | | mA | 1600 [1] | 1600 |
| Coil resistance | Cold value at 20°C | Ω | 5.5 | |
| | Max. warm value | Ω | 8.05 | |
| Duty | | % | 100 | |
| Electrical connentions | Component plug and plug-in connector to | | DIN EN 175301-803 | DIN EN 175201-804 |
| Valve protection to EN 60529 | | | IP65 with mounted and locked plug-in connector | |

| Control electronics [2] | | DBET | DBETE |
|---|---|---|---|
| | | External amplifier | Integrated into the valve, see page 11 |
| • Amplifier in Eurocard format (separate order) to catalogue sheet RE 30115 | Analogue | VT-VSPA1-2-1X<br>VT-VSPA1K-2-1X | – |
| • Amplifier of modular design (separate order) to catalogue sheet RE 30223 | Analogue | VT-MSPA1-1-1X | – |

[1] Dependent on the amplifier, see control electronics (external amplifier)

[2] Plug-in proportional amplifier VT-SSPA1-1-1X/V0/0-24 on enquiry.
(In this case, the characteristic curves and technical data specified in this data sheet are invalid!)

☞ **Note!**

For details regarding the **environmental simulation test** covering EMC (electro-magnetic compatibility), climate and mechanical loading see RE 29162-U (declaration regarding environmental compatibility).

## Electrical connections, plug-in connectors

**For type DBET** (for external control electronics)
Plug-in connector (black) to DIN EN 175301-803
Separate order under Material No. **R901017011**

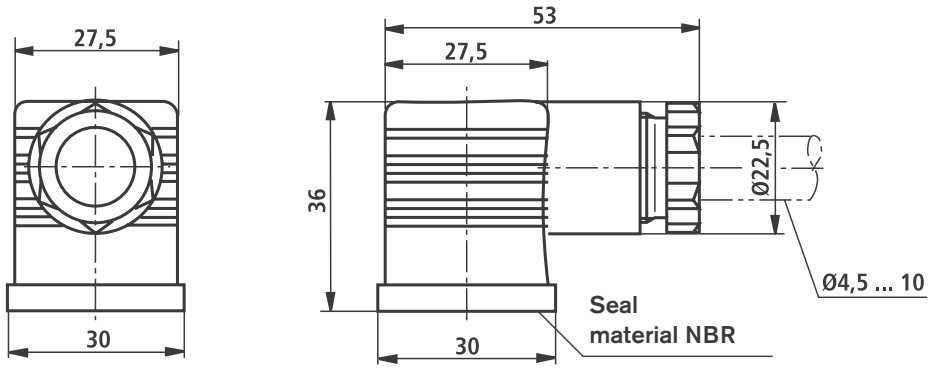


Component plug connections

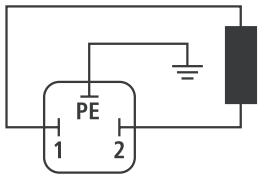


Plug-in connector connections

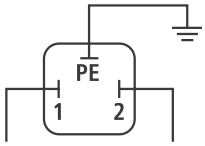


To amplifier

**For type DBETE** – with integrated control electronics (OBE)
Plug-in connector to DIN EN 175201-804

For pin allocation see block dircuit diagram on page 7
Soldered contacts: from 0.5 to 1.5 mm$^2$
(valid for both plug-in connectors)

Material No. **R900021267**
(plastic version)
Separate order

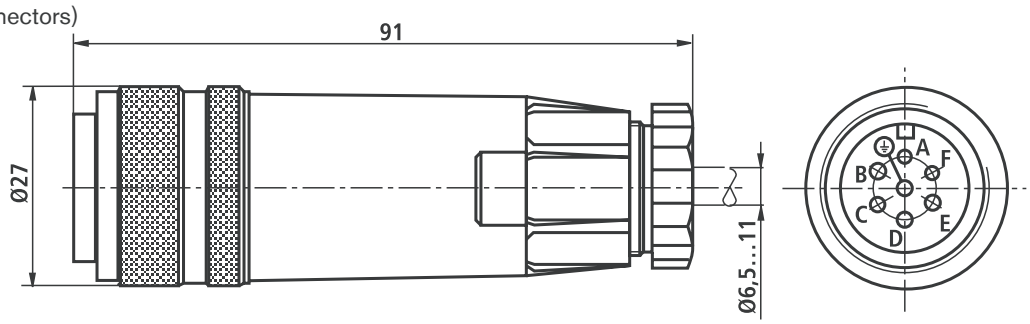


Material No. **R900223890**
(metal version)
Separate order

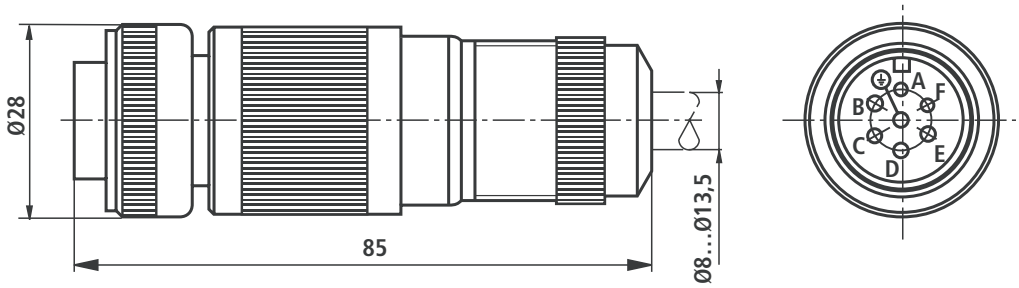


**Component plug pin allocation for type DBETE** [1)]

| | Contact | Interface „A1“ pin allocation | Interface „F1“ pin allocation |
|---|---|---|---|
| Supply voltage | A | 24 VDC ($u$(t) = 21 V to 35 V); $I_{max}$ <= 2 A | |
| | B | 0 V | |
| Act. value ref. potential | C | Ref. contact F; 0 V | Ref. contact F; 0 V |
| Differential amplifier input | D | 0 to 10 V Re > 100 kΩ | 4...20 mA; Re > 100 Ω |
| | E | Command value ref. potential | |
| Measurement output (act. value) | F | 0 to 1.6 V act. value (1 mV ≙ 1 mA) ohmic resistance > 10 kΩ | |
| | PE | Connected with the solenoid and valve housing | |

[1)] Also see the supply voltage on page 7

## Integrated control electronics (OBE), for type DBETE

### Function

The electronics are supplied with a voltage via connections „A“ and „B“. The command value is applied to the differential amplifier connections „D“ and „E“. The ramp generator forms from a command value jump (0%...100% or 100%...0%) a delayed increase or decrease of the solenoid current. The increase and decrease times are fixed and cannot be changed.

Via the characteristic curve generator the command value-solenoid-characteristic curve is so matched to the valve so that unlinearities in the hydraulics are compensated for and a linear command value-pressure-characteristic curve results.

The current controller regulates the solenoid current independent of the solenoid coil resistance.

The power stage of the electronics for controlling the proportional solenoids is a chopper amplifier with a clock pulse frequency of approx. 180 Hz to 400 Hz. The output signal is pulse-width-modulated (PWM).

To test the solenoid current it is possible, at the plug, to measure a voltage between pin „F“(+) and pin “C“(–), that reacts in proportion to the solenoid current. **1 mA** solenoid current is **1 mV**.

### Block circuit diagram

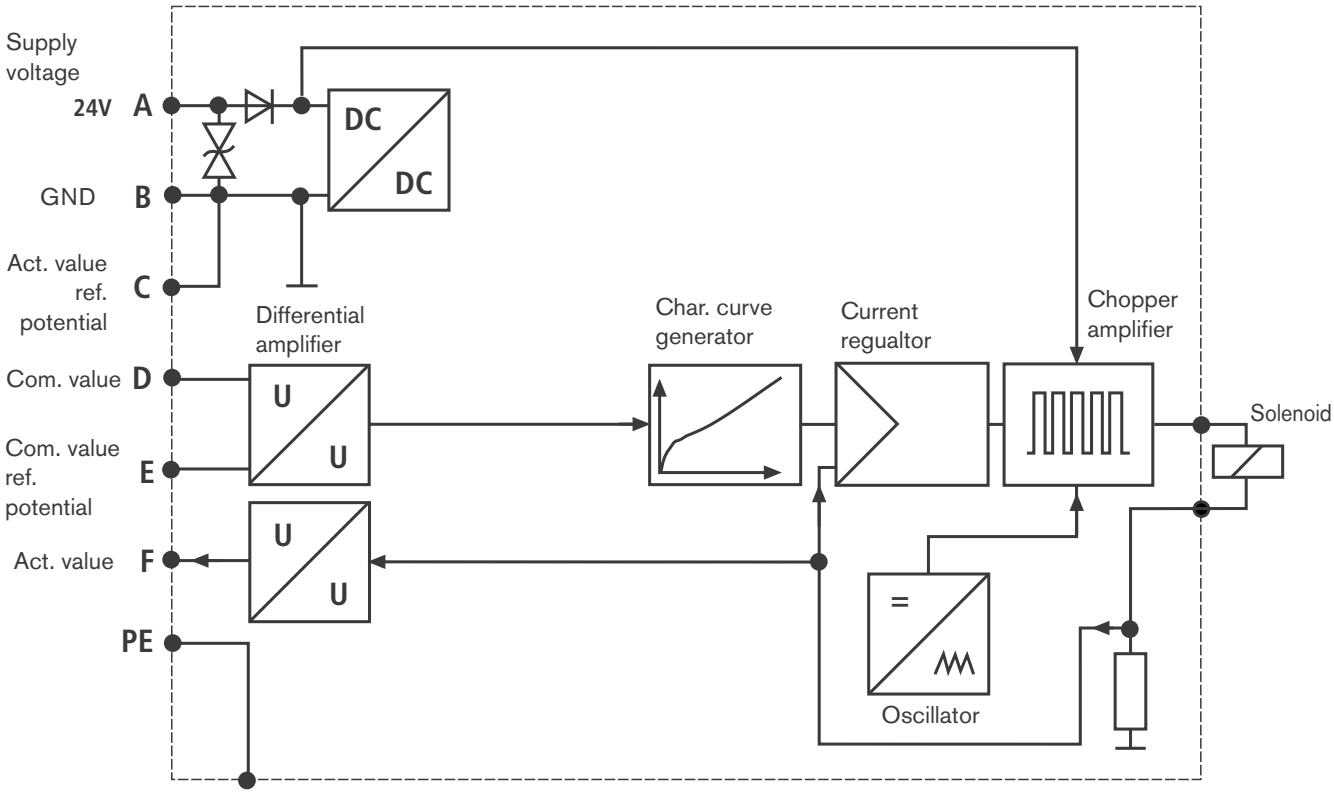


### Supply voltage

Power supply with rectifier

Single phase rectification or AC bridge:

$U_{eff}$ = 21 to 35 V

Output current: $I_{eff}$ = max. 1.85 A

Supply cable:

- Recommended 6-core 0.75 or 1 mm² plus earth and screen
- Outside diameter is dependent on the plug-in connector (page 6)
- Only connect the screen to PE on the supply side
- Max. permissible length 100 m

The minimum supply voltage at the power supply is dependent on the length of the supply cable (see diagram).

For lengths > 50 m a 2200 µ*F* condenser must be fitted in the supply cable in the vicinity of the valve.

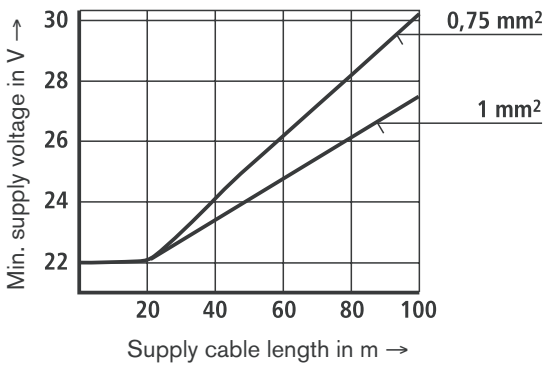

## **Characteristic curves** (measured with HLP 46, $\vartheta_{oil}$ = 40 °C ± 5 °C)

Pressure in port P in relation to the command value Flow = 0.8 l/min

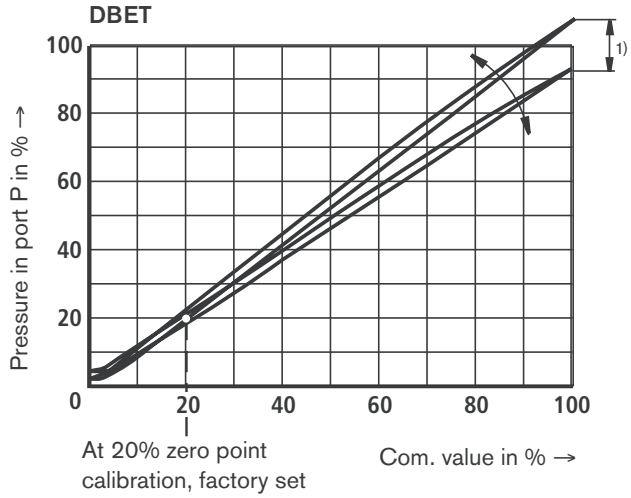


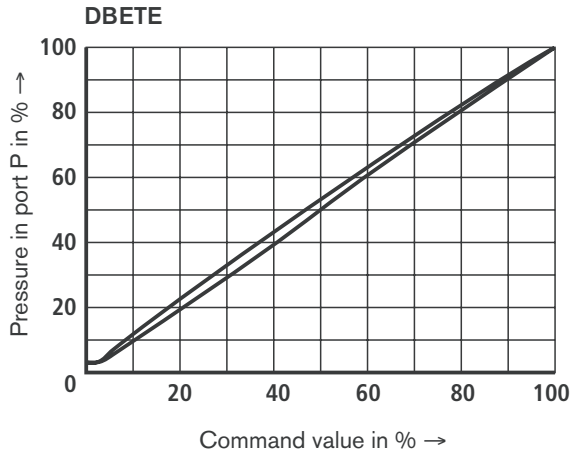


1) The tolerance can be changed at the external amplifier, for type and catalogue sheet see page 5, (command value attenuation potentiometer “Gw“). For a description, see the data sheet of the amplifier.

Max. permissible current 1750 mA (can be measured at amplifier measurement socket “I“)

In order that more than one valve can be calibrated to the same characteristic curve, with a 100% command value the pressure should not be set higher than the maximum settable pressures stated on page 4.

## Characteristic curves (measured with HLP 46, $\vartheta_{oil}$ = 40 °C ± 5 °C)

**Pressure in port P in relation to the flow**

**Pressure stage 50 bar**

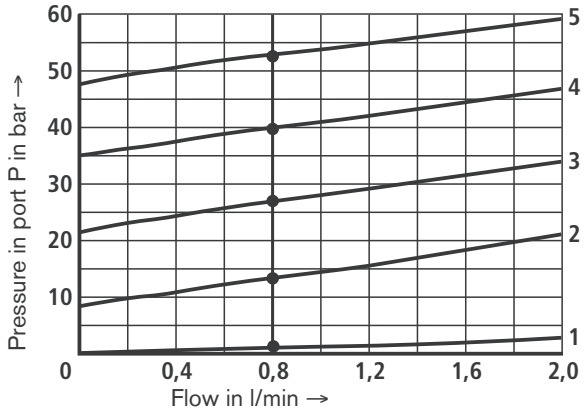


**Pressure stage 100 bar**

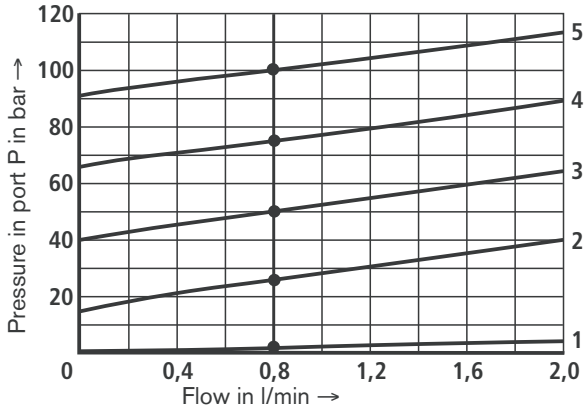


**Pressure stage 200 bar**

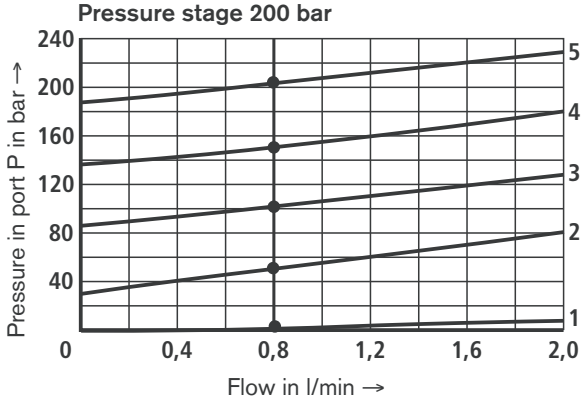


**Pressure stage 315 bar** [1)]

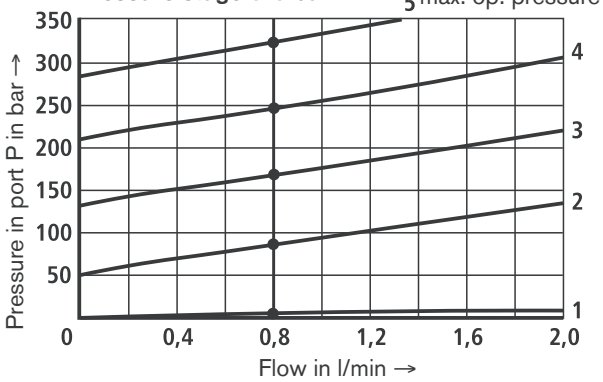


**Pressure stage 350 bar** [2)]

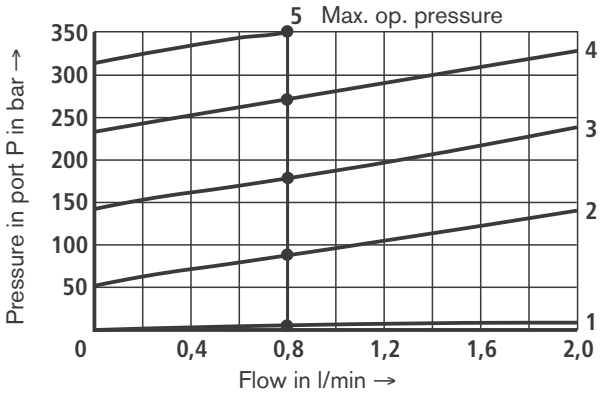


**Pressure stage 420 bar**

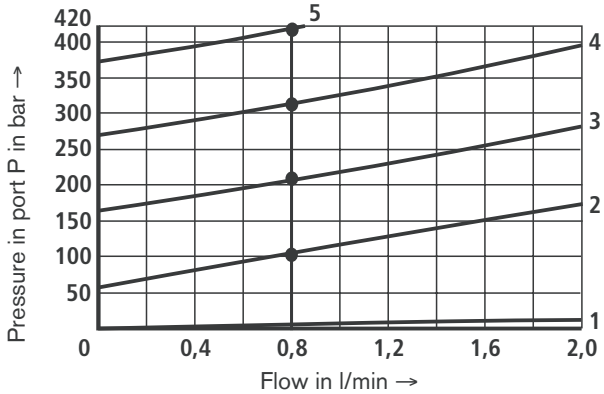


Valid for all pressure stages:

Curve 1 = 0 % command value

Curve 2 = 25 % command value

Curve 3 = 50 % command value

Curve 4 = 75 % command value

Curve 5 = 100 % command value[1; 2)]

The characteristic curves were measured without any back pressure in port T. ($p_T$ = 0 bar)

[1)] With characteristic curve 5, the command value must not exceed a flow of 1.4 l/min

[2)] With pressure stage 350 bar, characteristic curve 5, the command value must not exceed a flow of 0.8 l/min

## Characteristic curves (measured with HLP 46, $\vartheta_{oil}$ = 40 °C ± 5 °C)

**Min. settable pressure in port P with a 0 V or 4 mA command value in relation to the flow**

**Pressure stage 50 bar**

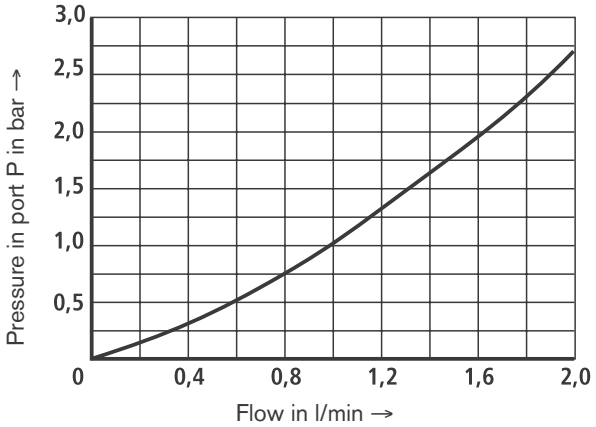


**Pressure stage 100 bar**

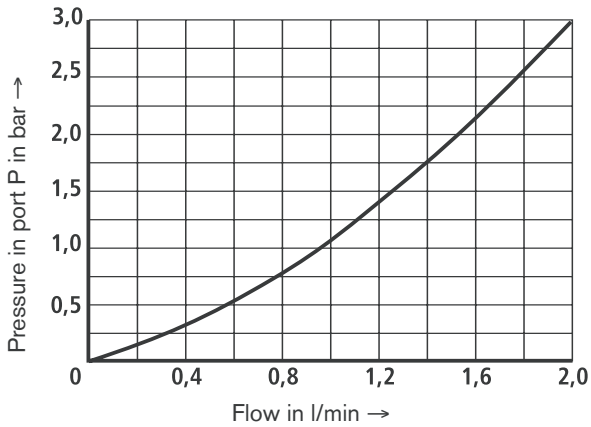


**Pressure stage 200 bar**

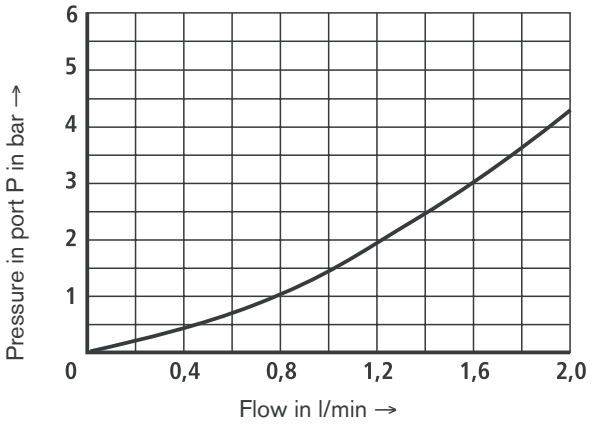


**Pressure stage 315 bar**

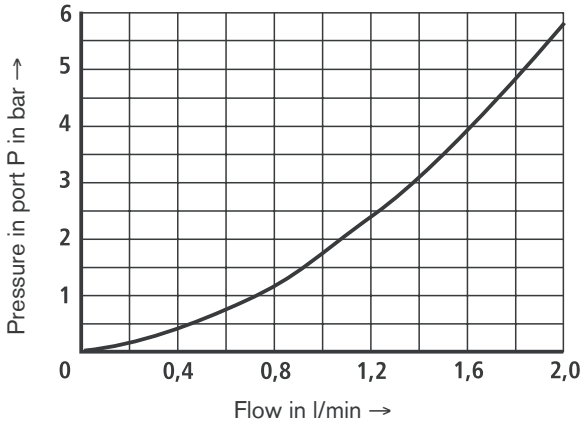


**Pressure stage 350 bar**

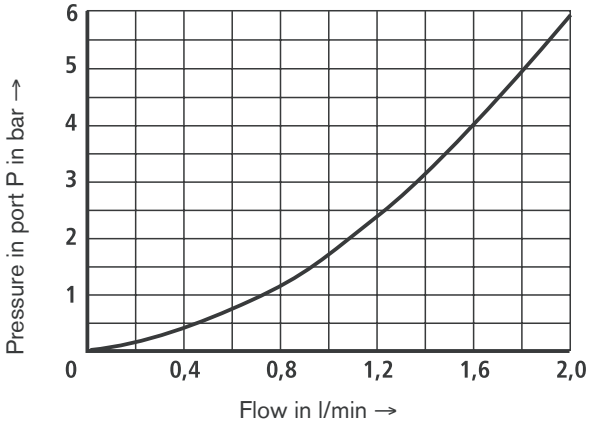


**Pressure stage 420 bar**

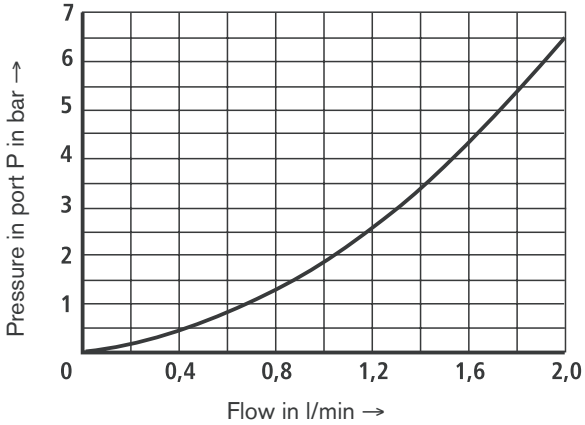


**Note**

The characteristic curves were measured without any back pressure in port T. ($p_T$ = 0 bar)

Min. control current ≤ 100 mA

(This current is set with a command value of 0 V or 4 mA)

## Unit dimensions: type DBET (nominal dimensions in mm)

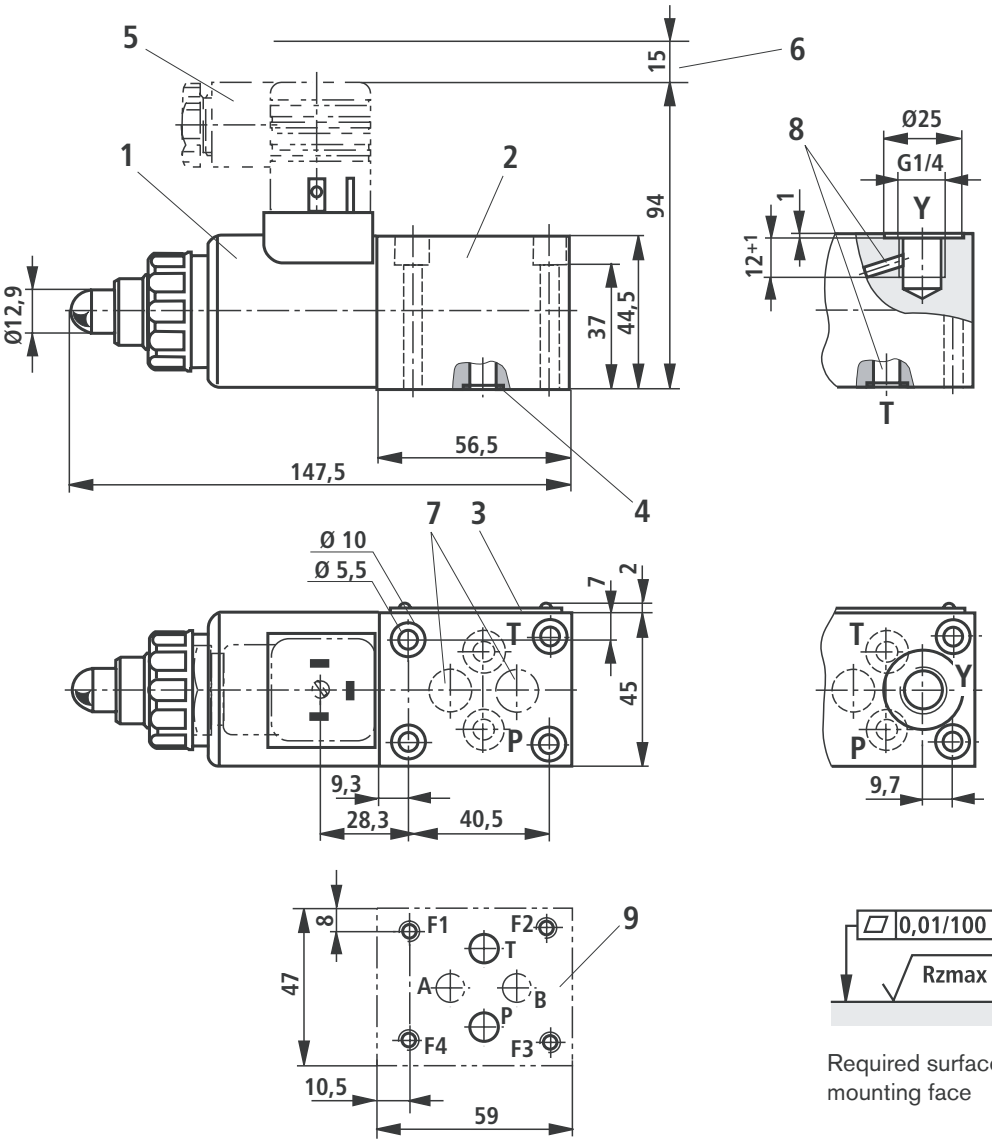


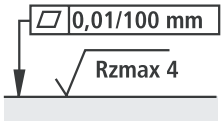


Required surface of the valve mounting face

1 Proportional solenoid
2 Valve housing
3 Name plate
4 Same sealing rings for ports P, T, A and B
5 Plug-in connector to DIN EN 175301-803 (separate order, see page 6)
6 Space required to remove the plug-in connector
7 Blind counterbores A and B
8 With version ..Y.. (external pilot oil drain), port Y is internally conntected to port T!

Port T is **not** plugged!

9 Machined valve mounting surface port location to ISO 4401-03-02-0-05

Deviations from the standard:
– Locating pin is not provided
– „A“ and „B“ ports **are not** drilled

Subplates to catalogue sheet RE 45052 and valve fixing screws must be ordered separately.

**Subplates:** G 341/01 (G 1/4)
G 342/01 (G 3/8)
G 502/01 (G 1/2)

**Valve fixing screws:**
(not included within the scope of supply)
Due to strength (tensile) reasons only use the following valve fixing screws:

**4 S.H.C.S. ISO 4762 - M5 x 45 - 10.9;**
**Coating to DIN EN ISO 10683 flZn - 240h - L**
(friction value 0.09 - 0.14 to VDA 235-101);
$M_A = 7$ Nm ± 10%
separate order Mat. No. **R913000140**

## **Unit dimensions: type DBETE** (nominal dimensions in mm)

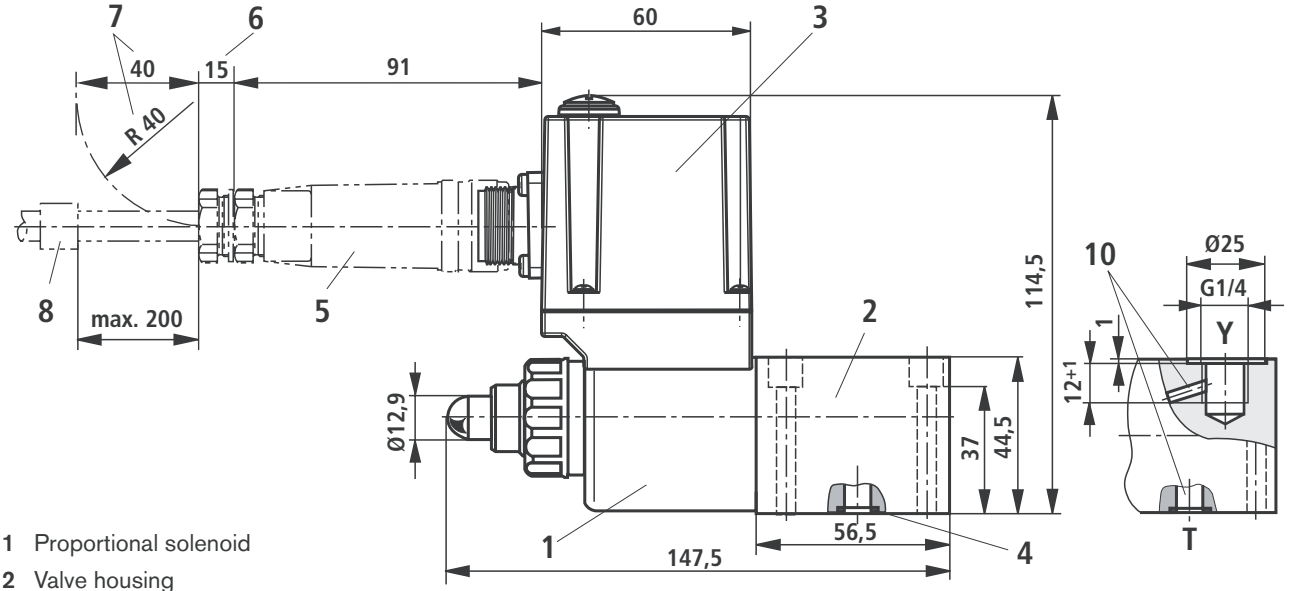


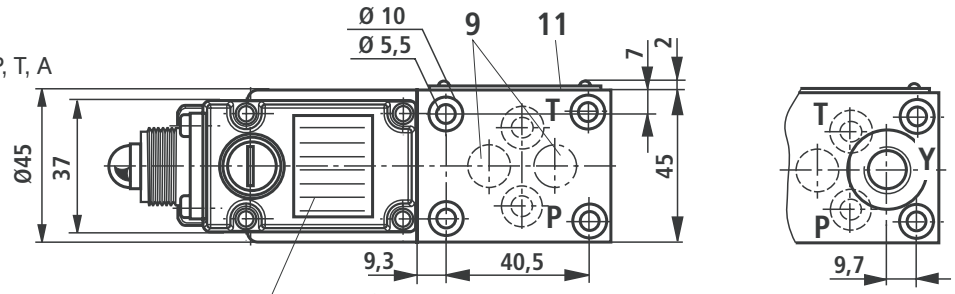


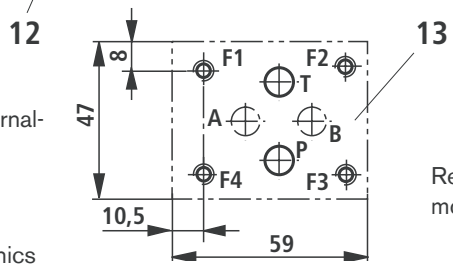


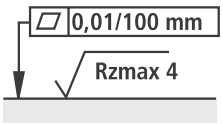


Required surface of the valve mounting face

1 Proportional solenoid
2 Valve housing
3 Integrated control electronics
4 Same sealing rings for ports P, T, A and B
5 Plug-in connector to DIN EN 175201-804 (separate order, see page 6)
6 Space required to remove the plug-in connector
7 Cable bend radius
8 Cable fixing
9 Blind counterbores A und B
10 With version ..Y.. (external pilot oil drain), port Y is internally conntected to port T!
Port T is **not** plugged!
11 Name plate
12 Block circuit diagram of the integrated control electronics
13 Machined valve mounting surface, port location to ISO 4401-03-02-0-05
Deviations from the standard:
– Locating pin is not provided
– „A“ and „B“ ports **are not** drilled

Subplates to catalogue sheet RE 45052 and valve fixing screws must be ordered separately.

**Subplates:** G 341/01 (G 1/4)
G 342/01 (G 3/8)
G 502/01 (G 1/2)

**Valve fixing screws:**
(not included within the scope of supply)

Due to strength (tensile) reasons only use the following valve fixing screws:

**4 S.H.C.S. ISO 4762 - M5 x 45 - 10.9;**
**Coating DIN EN ISO 10683 flZn - 240h - L**
(friction value 0.09 - 0.14 to VDA 235-101);
$M_A = 7$ Nm ± 10%

Separate order Mat. No. **R913000140**

Bosch Rexroth AG
Hydraulics
Zum Eisengießer 1
97816 Lohr am Main, Germany
Phone +49 (0) 93 52 / 18-0
Fax +49 (0) 93 52 / 18-23 58
documentation@boschrexroth.de
www.boschrexroth.de

© This document, as well as the data, specifications and other information set forth in it, are the exclusive property of Bosch Rexroth AG. It may not be reproduced or given to third parties without its consent.

The data specified above only serve to describe the product. No statements concerning a certain condition or suitability for a certain application can be derived from our information. The information given does not release the user from the obligation of own judgment and verification. It must be remembered that our products are subject to a natural process of wear and aging.